Counters & Undercounters

TCF1/2-CL-SS-DL-DR

1/1 GN Counter Freezer, 2 Section

Dimensions	
External Width (mm)	1411
External Depth (mm)	700
External Height (mm)	900
Exclusions	Depth does not include 41mm for door handles.
Net Volume (Litres)	167
Gross Volume (Litres)	420
Supplied Shelves	4
Shelf Size (L x D mm)	530 × 325
Internal Net Height (mm)	500
Unpackaged Weight (kg)	150
Packaged Weight (kg)	161
Packaged Dimensions (W x D x H mm)	1563 x 801 x 1067
Supplied with	Heavy duty lock-in-place ø 127 mm castors (152 mm height). Plinth mountable

Build	
Door Description	2 Solid Swing Doors
Door Opening	Left Door opens left, Right Door opens right Configurable and Field Reversible (opposite hinge part sold separate)
Exterior Construction	Stainless steel front & countertop, aluminium sides & rear
Interior Construction	Clear coated aluminium, stainless steel base
Air Intake Position	Front
Ventilation Position	Front
Clearance Required	Zero back and sides
Cord Length (Meters)	2.74
Standard w/ Locks	Standard

Technical	
Temperature Range	-23°C
Refrigerant	R290
Voltage/Frequency/Phase	220-240V/50Hz/1
Amps	0.7
Watts	161
Climate Class	5
Operating Statement	Heavy Duty: This appliance is intended for use in ambient temperatures up to 40°C.
Test Standard	EN22041:2019
EEC	C
Energy Efficiency Index	37.3
Defrost Type	Auto
Energy Consumption (kWh/24h)	3.429
Energy Consumption (kWh/Annum)	1252

Specifications subject to change without notice.
Chart dimensions rounded up to the next whole millimeter (inches rounded up to the 1/8")

UK & Ireland 0800 783 2049 TFIUK@truemfg.com
EMEA +41 61 563 07 05 TrueCHCustomerService@truemfg.com
Australia +61 2 9619 9999 TrueRefAus@truemfg.com

Counters & Undercounters

TCF1/2-CL-SS-DL-DR

1/1 GN Counter Freezer, 2 Section

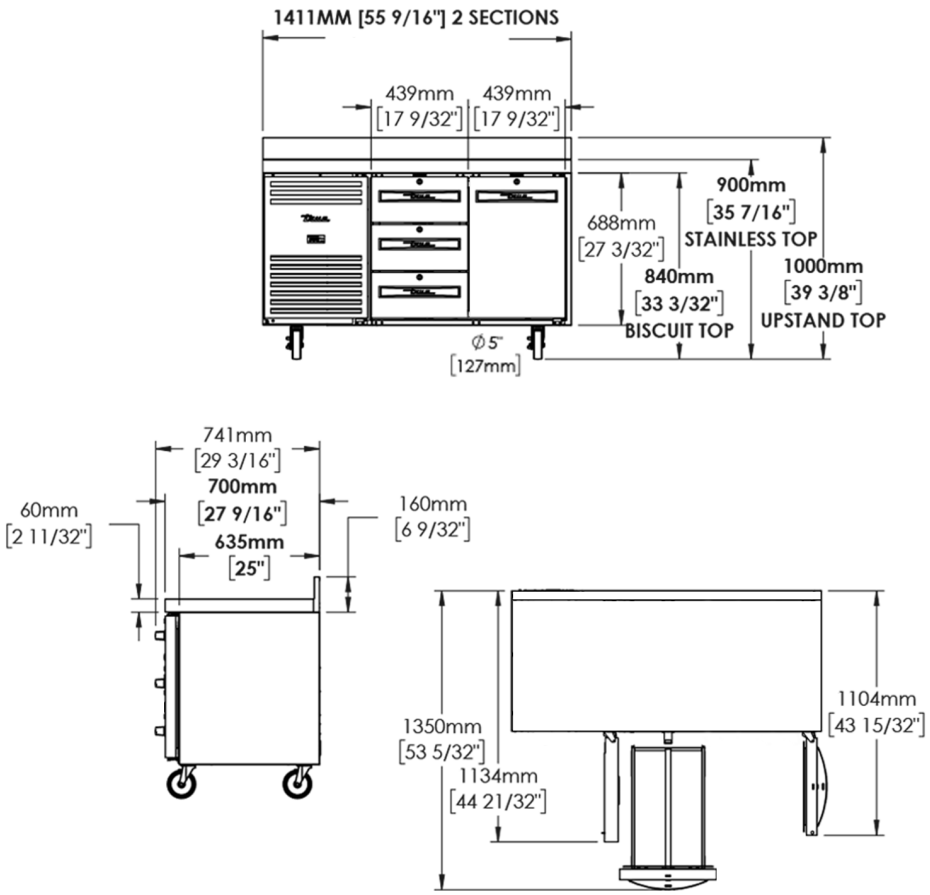

Specifications subject to change without notice.
Chart dimensions rounded up to the next whole millimeter (inches rounded up to the 1/8")

UK & Ireland	0800 783 2049	TFIUK@truemfg.com
EMEA	+41 61 563 07 05	TrueCHCustomerService@truemfg.com
Australia	+61 2 9619 9999	TrueRefAus@truemfg.com