Glass Door Display

TVM-48-HC~VM01

Visual Retail Merchandiser Refrigerator, 2 Full Glass Swing Doors

Dimensions	
External Width (mm)	1198
External Depth (mm)	757
External Height (mm)	1996
Exclusions	Depth does not include 38 mm for door handle or 13 mm for rear access panel.
Net Volume (Litres)	501
Gross Volume (Litres)	935
Display Area (m^2)	1.26
Supplied Shelves	8
Shelf Size (L x D mm)	541 x 496
Internal Net Height (mm)	1300
Unpackaged Weight (kg)	225
Packaged Weight (kg)	236
Packaged Dimensions (W x D x H mm)	1321 x 902 x 2134
Supplied with	Levelling Screws. Optional castors sold seperately.

Build	
Door Description	2 Full Glass Swing Doors
Exterior Construction	Black powder coated Steel front, sides and rear (Grey colour option)
Interior Construction	Black coated aluminium (White optional), stainless steel base
Air Intake Position	Front
Ventilation Position	Rear
Clearance Required	26 mm rear, zero sides
Cord Length (Meters)	3.05
Internal Lighting	LED

Technical	
Temperature Range	0.5 : 3.3°C
Refrigerant	R290
Voltage/Frequency/Phase	220-240V/50-60Hz/1
Amps	2.2
Watts	506
Temperature Class	M1
Operating Statement	Tested at 25°C, 60% RH, per 'Refrigerators with a Direct Sales Function' for perishable food merchandising.
Test Standard	EN23953-2:2023
EEC	B
Energy Efficiency Index	16.5
Defrost Type	Auto
Energy Consumption (kWh/24h)	4.29
Energy Consumption (kWh/Annum)	1565

7 YEARS WARRANTY PARTS, COMPRESSOR & LABOUR

natural refrigerant.

Specifications subject to change without notice.
Chart dimensions rounded up to the next whole millimeter (inches rounded up to the 1/8")

UK & Ireland	0800 783 2049	TFIUK@truemfg.com
EMEA	+41 61 563 07 05	TrueCHCustomerService@truemfg.com
Australia	+61 2 9619 9999	TrueRefAus@truemfg.com

Glass Door Display

TVM-48-HC~VM01

Visual Retail Merchandiser Refrigerator, 2 Full Glass Swing Doors

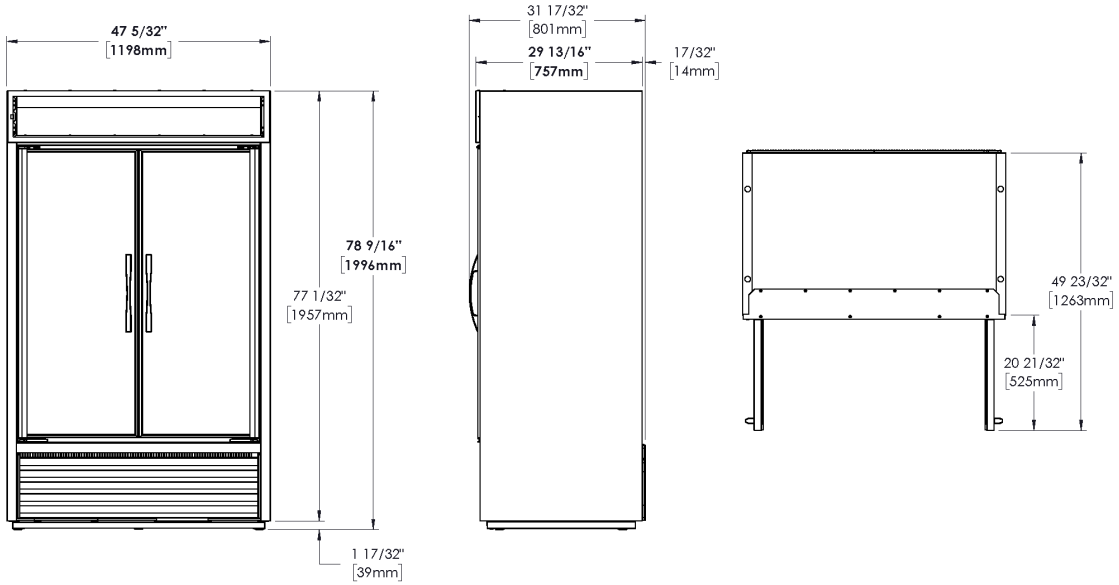

natural refrigerant.

Specifications subject to change without notice.
Chart dimensions rounded up to the next whole millimeter (inches rounded up to the 1/8")

UK & Ireland	0800 783 2049	TFIUK@truemfg.com
EMEA	+41 61 563 07 05	TrueCHCustomerService@truemfg.com
Australia	+61 2 9619 9999	TrueRefAus@truemfg.com